ECKO
Fastening Systems

makes your job easier

INDUSTRIAL SERIES

www.ecko.co.nz

Coil Nailer

Coil Nailer

Round head 15° angle wire coil
27mm - 90mm

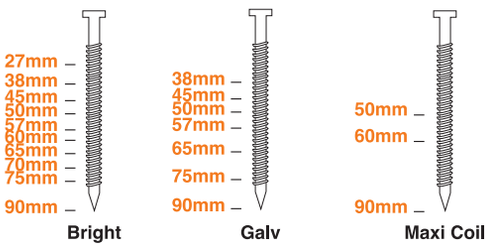

Features & Benefits

- Robust body design
- Single shot or bump fire
- Light weight, magnesium body
- Tough nail magazine cover
- Large magazine capacity
- Anti Double-Fire mechanism

Applications

- Pallet/Crate manufacturing
- Fencing
- Bed manufacturing
- Decking
- Decking
- High volume timber
- productions

Specifications

PN57	
Dimensions (mm)	L270 x W131 x H283
Weight	2.6 kg
Operating pressure	100 - 120 psi
Magazine capacity	300 - 500 nails
Fastener diameter	2.10 - 3.33mm
Fastener length	27 - 90mm
PN70	
Dimensions (mm)	L306 x W128 x H315
Weight	3.6 kg
PN80	
Dimensions (mm)	L307 x W128 x H362
Weight	3.96 kg
PN100	
Dimensions (mm)	L338 x W156 x H417
Weight	5.5 kg

Maintenance

Recommended 10 drops daily, disconnect the air hose, apply 10 drops of pneumatic oil into the nailer

9 421023 348800

9 421023 348824

9 421023 348831

9 421023 348848

PRODUCT CODE	DESCRIPTION	PER	CTN QTY
16 Wire Collated Nails			
ECKO Coil Nailer			
PN57	ECKO PN57 Coil Nailer	Each	Each
PN70	ECKO PN70 Coil Nailer	Each	Each
PN80	ECKO PN80 Coil Nailer	Each	Each
PN100	ECKO PN100 Coil Nailer	Each	Each
OIL250	ECKO Premium Pneumatic Tool Lubricant 250ml	Each	6
2.1mm Bright Coil Nails (Similar to AC and Jambro JCN nails)			
CNF-2132R	Wire Coil Flat - Bright Ring 32 x 2.1	Carton	16,000
2.5mm Bright Coil Nails (Similar to AC and Jambro JCN nails)			
CN-2527R	Wire Coil - Bright Ring 27 x 2.5	Carton	9,000
CN-2538R	Wire Coil - Bright Ring 38 x 2.5	Carton	9,000
CN-2545R	Wire Coil - Bright Ring 45 x 2.5	Carton	9,000
CN-2550R	Wire Coil - Bright Ring 50 x 2.5	Carton	9,000
CN-2565R	Wire Coil - Bright Ring 65 x 2.5	Carton	9,000
2.8mm Bright Coil Nails (Similar to AC and Jambro JCN nails)			
CN-2850R	Wire Coil - Bright Ring 50 x 2.8	Carton	6,000
CN-2860R	Wire Coil - Bright Ring 60 x 2.8	Carton	6,000
CN-2865R	Wire Coil - Bright Ring 65 x 2.8	Carton	6,000
CN-2870S	Wire Coil - Bright Smooth 70 x 2.8	Carton	6,000
CN-2875R	Wire Coil - Bright Ring 75 x 2.8	Carton	6,000
3.15mm Bright Coil Nails (Similar to AC and Jambro JCN nails)			
CN-31590S	Wire Coil - Bright Smooth 90 x 3.15	Carton	4,500
3.33mm Bright Coil Nails (Similar to AC and Jambro JCN nails)			
CN-33342R	Wire Coil - Bright Ring 42 x 3.33	Carton	6,000
CN-33370R	Wire Coil - Bright Ring 70 x 3.33	Carton	4,500
CN-33390R	Wire Coil - Bright Ring 90 x 3.33	Carton	4,500
Ring Shank Coil Nails - Galvanised			
CNHP-2545R	Wire Coil - Galvanised Ring 2.5 x 45	Carton	9,000
CNHP-2850R	Wire Coil - Galvanised Ring 50 x 2.8	Carton	6,000
CNHP-2857SC	Wire Coil - Galvanised Screw 57 x 2.8	Carton	6,000
CNHP-2865R	Wire Coil - Galvanised Ring 65 x 2.8	Carton	6,000
CNHP-2875R	Wire Coil - Galvanised Ring 75 x 2.8	Carton	6,000
CNHP-30532R	Wire Coil - Galvanised Ring 32 x 3.05	Carton	6,000
CNHP-30540R	Wire Coil - Galvanised Ring 40 x 3.05	Carton	6,000
CNHP-31560R	Wire Coil - Galvanised Ring 60 x 3.15	Carton	4,500
CNHP-31575R	Wire Coil - Galvanised Ring 75 x 3.15	Carton	4,500
CNHP-31590R	Wire Coil - Galvanised Ring 90 x 3.15	Carton	4,500
Maxi Coil Nails			
CNXI-2850R	Maxi Wire Coil - Bright Ring 50 x 2.8	Carton	2500*2
CNXI-2860R	Maxi Wire Coil - Bright Ring 60 x 2.8	Carton	2500*2
CNXI-2865R	Maxi Wire Coil - Bright Ring 65 x 2.8	Carton	2500*2
CNXI-2880S	Maxi Wire Coil - Bright Smooth 80 x 2.8	Carton	2000*2
CNXI-31590S	Maxi Wire Coil - Bright Smooth 90 x 3.15	Carton	2000*2
CNXI-33370R	Maxi Wire Coil - Bright Ring 70 x 3.33	Carton	2000*2
CNXI-33390R	Maxi Wire Coil - Bright Ring 90 x 3.33	Carton	2000*2
Maxi Coil Nails Galvanised			
CNHPXI-2865R	Maxi Wire Coil - Galvanised Ring 65 x 2.8	Carton	2500*2
CNHPXI-2865R4K	Maxi Wire Coil - Galvanised Ring 65 x 2.9	Carton	2000*2
CNHPXI-2875R	Maxi Wire Coil - Galvanised Ring 75 x 2.8	Carton	2500*2
CNHPXI-2875R4K	Maxi Wire Coil - Galvanised Ring 75 x 2.9	Carton	2000*2
CNHPXI-31590S	Maxi Wire Coil - Galvanised Smooth 90 x 3.15	Carton	2000*2

BC65

16 Gauge Staight Air Bradder

C series, 16 gauge straight finish brads
25mm - 63mm

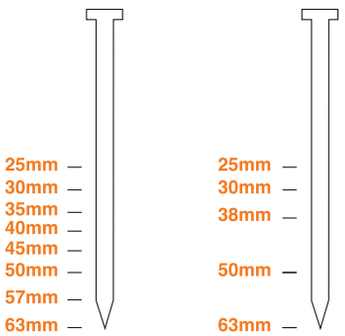

Features & Benefits

- Depth control adjustment
- Bump fire and sequential fire trigger
- High capacity rear loading magazine
- Rubber grip provides comfortable feel

Applications

- Decoration
- Light frame
- Door
- Window
- Boards in furniture
- Hardwood florring
- Planeling trim panels

Specifications

Dimensions (mm)	L287 x W73 x H278
Weight	1.76 kg
Operating pressure	100 - 120 psi
Magazine capacity	100 brads
Fastener diameter	1.60mm
Fastener length	25 - 63mm

Maintenance

Recommended 10 drops daily, disconnect the air hose, apply 10 drops of pneumatic oil into the nailer

9 421023 348350

PRODUCT CODE	DESCRIPTION	PER	BOX QTY
ECKO Air Straight Bradder 16 gauge			
BC65	ECKO BC65 Air Straight Bradder 16 Gauge	Each	Each
OIL250	ECKO Premium Pneumatic Tool Lubricant 250ml	Each	6
16 Gauge C Brads Gasless Pack - E/Galvanised			
BC-1625	C25 x 1.6mm E/Galvanised Straight Brads	Box	2,500
BC-1630	C30 x 1.6mm E/Galvanised Straight Brads	Box	2,500
BC-1635	C35 x 1.6mm E/Galvanised Straight Brads	Box	2,500
BC-1640	C40 x 1.6mm E/Galvanised Straight Brads	Box	2,500
BC-1645	C45 x 1.6mm E/Galvanised Straight Brads	Box	2,500
BC-1650	C50 x 1.6mm E/Galvanised Straight Brads	Box	2,500
BC-1663	C63 x 1.6mm E/Galvanised Straight Brads	Box	2,500
16 Gauge C Brads Gasless Pack - 304 Stainless Steel			
BCSS-1625	C25 x 1.6mm S/Steel Straight Brads	Box	2,500
BCSS-1630	C30 x 1.6mm S/Steel Straight Brads	Box	2,500
BCSS-1638	C38 x 1.6mm S/Steel Straight Brads	Box	2,500
BCSS-1650	C50 x 1.6mm S/Steel Straight Brads	Box	2,500
BCSS-1663	C63 x 1.6mm S/Steel Straight Brads	Box	2,500

18 Gauge Straight Air Bradder

18 Gauge Straight Air Bradder

C100 series, 18 gauge straight finish brads
10mm - 50mm

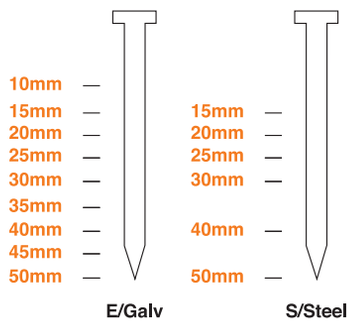

Features & Benefits

- Tool -free depth setting bolt
- No mark pad
- Dry-fire lock out
- Excellent durability
- Reliable rugged construction

B1832P

9 421023 348428

Applications

- Decoration
- Paneling trim panels
- Door mouldings
- Cabinet manufacture
- Toy manufacture
- Picture framing

B1850P

9 421023 348435

Specifications

B1832P	
Dimensions (mm)	L255 x W53 x H213
Weight	1.1 kg
Operating pressure	70 - 100 psi
Magazine capacity	100 brads
Fastener diameter	1.25 x 1.00mm
Fastener length	10 - 32mm
B1850P	
Dimensions (mm)	L248 x W59 x H233
Weight	1.25 kg
Operating pressure	70 - 100 psi
Magazine capacity	100 brads
Fastener diameter	1.25 x 1.00mm
Fastener length	15 - 50mm

Maintenance

Recommended 10 drops daily, disconnect the air hose, apply 10 drops of pneumatic oil into the nailer

PRODUCT CODE	DESCRIPTION	PER	BOX QTY
ECKO C100 Series Bradders			
B1832P	ECKO C132 Air Bradder 18 gauge	Each	Each
B1850P	ECKO C150 Air Bradder 18 gauge	Each	Each
OIL250	ECKO Premium Pneumatic Tool Lubricant 250ml	Each	6
C100 Series Brads (Similar to Ace F nails, Atro Tip/Haubold 1.6/Bostitch 1200C/Duo-fast 6000) - E/Galvanised			
BF-1815	C115 x 1.2mm E/Galvanised Straigh Brads	Box	5,000
BF-1820	C120 x 1.2mm E/Galvanised Straigh Brads	Box	5,000
BF-1825	C125 x 1.2mm E/Galvanised Straigh Brads	Box	5,000
BF-1830	C130 x 1.2mm E/Galvanised Straigh Brads	Box	5,000
BF-1835	C135 x 1.2mm E/Galvanised Straigh Brads	Box	5,000
BF-1840	C140 x 1.2mm E/Galvanised Straigh Brads	Box	5,000
BF-1845	C145 x 1.2mm E/Galvanised Straigh Brads	Box	5,000
BF-1850	C150 x 1.2mm E/Galvanised Straigh Brads	Box	5,000
C100 Seriess Brads - 304 Stainless Steel			
BFSS-1815	C115 x 1.2mm S/Steel Straight Brads	Box	5,000
BFSS-1820	C120 x 1.2mm S/Steel Straight Brads	Box	5,000
BFSS-1825	C125 x 1.2mm S/Steel Straight Brads	Box	5,000
BFSS-1830	C130 x 1.2mm S/Steel Straight Brads	Box	5,000
BFSS-1840	C140 x 1.2mm S/Steel Straight Brads	Box	5,000
BFSS-1850	C150 x 1.2mm S/Steel Straight Brads	Box	5,000

Corrugated Fastener

Corrugated Fastener

CF series, corrugated fasteners
10mm - 25mm

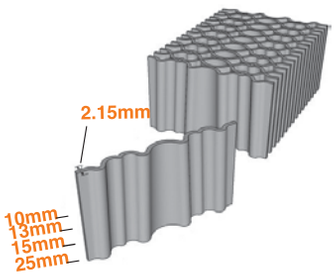

Features & Benefits

- Light weight
- Powerful
- Single or bump trigger adjustment

Applications

- Truss fixing
- Timber joinery
- Butt and corner jointing in furniture
- Butt and corner for windows and windows

Specifications

Dimensions (mm)	L305x W70 x H265
Weight	2.85 kg
Operating pressure	100 - 120 psi
Magazine capacity	75 fasteners
Fastener diameter	2.15mm
Fastener length	10 - 25mm

Maintenance

Recommended 10 drops daily, disconnect the air hose, apply 10 drops of pneumatic oil into the nailer

PRODUCT CODE	DESCRIPTION	PER	CTN QTY
ECKO Corrugated Fastener			
F45C	FASCO F45C Corrugated Gun (9-15mm)	Each	Each
OIL250	ECKO Premium Pneumatic Tool Lubricant 250ml	Each	6
Corrugated Fasteners			
CF-3610A	CF10A Corrugated Fasteners	Carton	9,216
CF-3613A	CF13A Corrugated Fasteners	Carton	6,912
CF-3615A	CF15A Corrugated Fasteners	Carton	5,184
CF-3625A	CF25 Jumbo Corrugated Fasteners	Carton	2,000

9 421023 348640

Wide Crown Stapler

Wide Crown Stapler

P series, wide crwon staples
13mm - 38mm

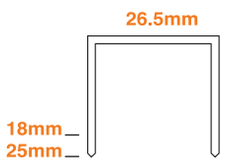

E/Galv

Features & Benefits

- Heavy duty stapler
- Powerful and high speed performance
- Dry-fire lock out
- Excellent durability

Applications

- Furniture frames
- Wooden boxes
- Supporting structure made of wood
- Light weight pallet
- Cable reels

Specifications

Dimensions (mm)	L363 x W94 x H251
Weight	2.50 kg
Operating pressure	100 - 120 psi
Magazine capacity	160 staples
Staple width	26.5mm
Staple length	13 - 25mm

Maintenance

Recommended 10 drops daily, disconnect the air hose, apply 10 drops of pneumatic oil into the nailer

PRODUCT CODE	DESCRIPTION	PER	CTN QTY
ECKO P Series Framing Stapler			
SP40	ECKO SP40 Wide Crown Heavy Duty Air Stapler	Each	Each
OIL250	ECKO Premium Pneumatic Tool Lubricant 250ml	Each	6
P Series Staples (Similar to ISL PW Series, Senco P Series) - E/Galvanised			
SW-5518	P 18 x 1.6mm E/Galvanised Staples	Carton	10,000
SW-5525	P 25 x 1.6mm E/Galvanised Staples	Carton	10,000

9 421023 348572

Heavy Duty Stapler

Heavy Duty Stapler

G55 series, heavy duty staples
12mm - 50mm

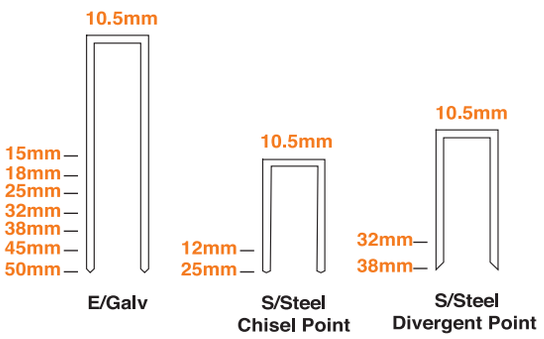

Features & Benefits

- Heavy duty stapler
- Powerful and high speed performance
- Dry-fire lock out
- Excellent durability

Applications

- Sofa frames
- Wooden boxes
- Furniture frame resembly
- Light weight pallet
- Cable reels

Specifications

Dimensions (mm)	L363 x W94 x H272
Weight	2.30 kg
Operating pressure	100 - 120 psi
Magazine capacity	160 staples
Staple width	10.5mm
Staple length	12 - 50mm

Maintenance

Recommended 10 drops daily, disconnect the air hose, apply 10 drops of pneumatic oil into the nailer

9 420051 800953

PRODUCT CODE	DESCRIPTION	PER	CTN QTY
ECKO G55 Series Stapler			
SG50	ECKO SG50 Heavy Duty Air Stapler	Each	Each
OIL250	ECKO Premium Pneumatic Tool Lubricant 250ml	Each	6
G55 Series Staples (Similar to ISL 155 Series, Senco N) - E/Galvanised			
G55-16	G55-16 x 1.6mm E/Galvanised Staples	Carton	10,000
G55-18	G55-18 x 1.6mm E/Galvanised Staples	Carton	10,000
G55-25	G55-25 x 1.6mm E/Galvanised Staples	Carton	10,000
G55-32	G55-32 x 1.6mm E/Galvanised Staples	Carton	10,000
G55-38	G55-38 x 1.6mm E/Galvanised Staples	Carton	10,000
G55-45	G55-45 x 1.6mm E/Galvanised Staples	Carton	10,000
G55-50	G55-50 x 1.6mm E/Galvanised Staples	Carton	10,000
G55 Series Staples (Similar to ISL 155 Series, Senco N) - Stainless Steel			
G55-12 SS CP	G55-12 x 1.6mm S/Steel CP Staples	Carton	10,000
G55-25 SS CP	G55-25 x 1.6mm S/Steel CP Staples	Carton	5,000
G55-32 SS DP	G55-32 x 1.6mm S/Steel DP Staples	Carton	2,000
G55-38 SS DP	G55-38 x 1.6mm S/Steel DP Staples	Carton	2,000

*DP - Divergent Point *CP - Chisel Point

P9240

Window Stapler

Window Stapler

92 series, medium crown staples
12mm - 38mm

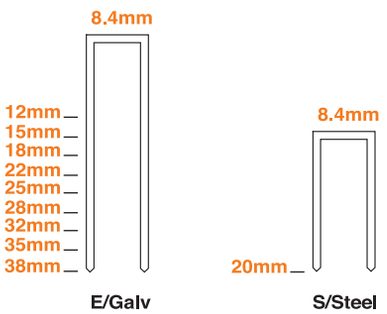

Features & Benefits

- Compact, powerful
- Powerful and high speed performance
- Dry-fire lock out
- Excellent durability

Applications

- Windows
- Doors
- Case assembly
- Siding
- Trim work

Specifications

Dimensions (mm)	L363 x W94 x H272
Weight	2.30 kg
Operating pressure	100 - 120 psi
Magazine capacity	160 staples
Staple width	10.5mm
Staple length	12 - 50mm

Maintenance

Recommended 10 drops daily, disconnect the air hose, apply 10 drops of pneumatic oil into the nailer

9 421023 348947

PRODUCT CODE	DESCRIPTION	PER	BOX QTY
ECKO 92 Series Stapler			
P9240	HAMMAHAND® P9240 Window Stapler	Each	Each
OIL250	ECKO Premium Pneumatic Tool Lubricant 250ml	Each	6
92 Series Staples (Similar to ISL 92, BeA 92) - E/Galvanised			
SF-9212	92/12 E/Galvanised Staples	Box	5,000
SF-9215	92/15 E/Galvanised Staples	Box	5,000
SF-9218	92/18 E/Galvanised Staples	Box	5,000
SF-9222	92/22 E/Galvanised Staples	Box	5,000
SF-9225	92/25 E/Galvanised Staples	Box	5,000
SF-9228	92/28 E/Galvanised Staples	Box	5,000
SF-9232	92/32 E/Galvanised Staples	Box	5,000
SF-9235	92/35 E/Galvanised Staples	Box	5,000
SF-9238	92/38 E/Galvanised Staples	Box	5,000
92 Series Staples - Stainless Steel			
SFSS-9220	92/20 S/Steel Staples	Box	1,200

*Stainless Steel are available by indent order

P9040

Trellis Stapler

Trellis Stapler

90 series, narrow crown staples
10mm - 38mm

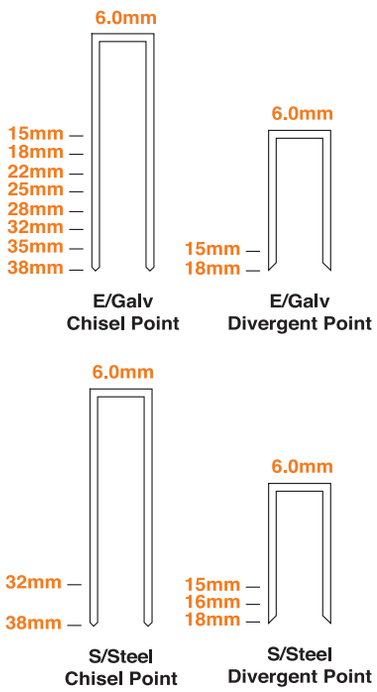

Features & Benefits

- Well balanced
- Excellent durability
- Dry-fire lock out

Applications

- Trellis
- Windows
- Door frames
- Cabinetry
- Interior trim

Specifications

Dimensions (mm)	L281.6 x W50 x H276.5
Weight	1.6 kg
Operating pressure	100 - 120 psi
Magazine capacity	150 staples
Staple diameter	1.25 x 1.00mm
Staple length	10 - 38mm

Maintenance

Recommended 10 drops daily, disconnect the air hose, apply 10 drops of pneumatic oil into the nailer

9 421023 348930

PRODUCT CODE	DESCRIPTION	PER	BOX QTY
ECKO 90 Series Stapler			
P9040	HAMMAHAND® P9040 Trellis Stapler	Each	Each
OIL250	ECKO Premium Pneumatic Tool Lubricant 250ml	Each	6
6000 Series Staples (Similar to ISL 90, Senco L / Duo-fast 1800 / BeA 90 / Haubold 6000) - E/Galvanised			
SM-6015	6015 E/Galvanised Staples	Box	5,000
SM-6018	6018 E/Galvanised Staples	Box	5,000
SM-6022	6022 E/Galvanised Staples	Box	5,000
SM-6025	6025 E/Galvanised Staples	Box	5,000
SM-6028	6028 E/Galvanised Staples	Box	5,000
SM-6032	6032 E/Galvanised Staples	Box	5,000
SM-6035	6035 E/Galvanised Staples	Box	5,000
SM-6038	6038 E/Galvanised Staples	Box	5,000
6000 Series StaplesDivergent Point - E/Galvanised			
SM-6015DP	6015 E/Galvanised DP Staples	Box	5,000
SM-6018DP	6018 E/Galvanised DP Staples	Box	5,000
6000 Series Staples - 304 Stainless Steel			
SMSS-6015DP	6015 S/Steel DP Staples	Box	5,000
SMSS-6016DP	6016 S/Steel DP Staples	Box	5,000
SMSS-6018DP	6018 S/Steel DP Staples	Box	5,000
SMSS-6032CP	6032 S/Steel CP Staples	Box	2,500
SMSS-6038CP	6038 S/Steel CP Staples	Box	2,500

*DP - Divergent Point *CP - Chisel Point

Upholstery Stapler

Upholstery Stapler

71 series, fine wire staples
4mm - 14mm

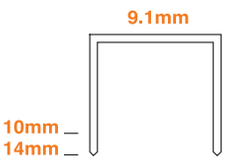

E/Galv

P7116

Features & Benefits

- Lightweight
- Wellbalanced
- Narrow nose design

Applications

- Upholstery
- Bed manufacturing
- Picture framing
- Corner blocks
- Drawer runners
- Padding

P7116AUTO

Specifications

Dimensions (mm)	L363 x W94 x H272
Weight	0.90 kg
Operating pressure	70 - 100 psi
Magazine capacity	150 staples

Maintenance

Recommended 10 drops daily, disconnect the air hose, apply 10 drops of pneumatic oil into the nailer

PRODUCT CODE	DESCRIPTION	PER	BOX QTY
ECKO 71 Series Stapler			
P7116	HAMMAHAND® P7116 Upholstery Stapler	Each	Each
P7116AUTO	HAMMAHAND® P7116 AUTO Upholstery Stapler	Each	Each
OIL250	ECKO Premium Pneumatic Tool Lubricant 250ml	Each	6
71 Series Staples (Similar to Senco C Series, Atro 71, JK 670, BeA 71) - E/Galvanised			
SF-7110B	7110 E/Galvanised Black Coated Staples	Box	10
SF-7114B	7114 E/Galvanised Black Coated Staples	Box	10

ECKO Fastening Systems makes your job easier

info@ecko.co.nz I 09 279 0210

Auckland
17 Carpenter Road,
East Tamaki, Auckland
New Zealand 2013

Hastings
500 Coventry Road,
Tomoana, Hastings
New Zealand 4172

Christchurch
37 Buchanans Road,
Hornby, Christchurch
New Zealand 8042

www.ecko.co.nz

@eckofasteners

@eckofasteners