ECKO
Fastening Systems

makes your job easier

CONSTRUCTION SERIES

www.ecko.co.nz

CONTENTS

CONSTRUCTION SERIES *1 - 24*

1-2 HAMMAHAND® Weatherboard Nailer WB75
3 HAMMAHAND® Airpunch® P90, HAMMAHAND® Attachment Xnose®
4 HAMMAHAND® V8compressor® EK1501
5-6 HAMMAHAND® High Wind Zone Weatherboard Nailer WB90
7-8 BracketMaster Nailer MC38, Joist Hanger Nailer PN38
9-10 FrameTec100 Construction Air Framer ND100S
9-10 FrameTec90™ Construction Air Framer ND90S
11-12 ExteriorMaster™ Air Angle Bradder AB1550FN
13-14 Wrap-Tacker® Air Stapler RD1116P
13-14 Construction Staple Tacker LT1, Construction Hammer Tacker XPRO
15-16 MetaltileMaster™ Nailer MT65
17-18 BattenMaster™ Barb Stapler FBS50
19-20 Shingle Roof Coil Nailer PA45
21 Palm Nailer PNC1
22 CannonMaster™ Strip Nailer NR160
23-24 15 Gauge Angle Bradder DA64

CORDLESS SERIES *25 - 38*

25 RebarMaster Cordless Rebar Tying Tool XPOWERPLUS
26 QD Collated Screws
27-28 MultiCell® MultiCell Fuel Cell
29-30 Ultimate90® Gas Framer GTND90G
31-32 Round Head Framing Nails
33-34 InteriorMaster™ Gas Angle Bradder GTAG16G
35-36 InteriorMaster™ Gas Straight Bradder GTBC16G
37-38 BattenMaster™ Gas Stapler GTFB60

INDUSTRIAL SERIES ***39 - 54***

39-40	Coil Nailer PN57 l PN70 l PN80 l PN100
41-42	16 Gauge Straight Air Bradder BC65
43-44	18 Gauge Air Bradder B1832P l B1850P
45	Corrugated Fastener F45C
46	Wide Crown Stapler SP40
47-48	Heavy Duty Stapler SG50
49-50	Window Stapler P9240
51-52	Trellis Stapler P9040
53-54	Upholstery Stapler P7116 l P7116AUTO

LOOSE NAILS SERIES ***55 - 67***

55	Loose Nails Packaging
56-58	Flat Head
59-61	Jolt Head
62	Bracket Nail, Clout Nail, Underlay
63	Fibre Cement, Fence Pailing, Decking
64	Staple Barbed, Staple Slice Cut, Plasterboard Nail
65	Panel Pin, Spring Head Twisted Nail
66	Silicon Bronze - Rose Head, Flat Head
67	Rose Head - 316 Stainless Steel

WB75

HAMMAHAND®
Weatherboard Nailer

Jolt head, Round head 15˚ angle wire coil and WirelessCoil nails
27mm - 75mm

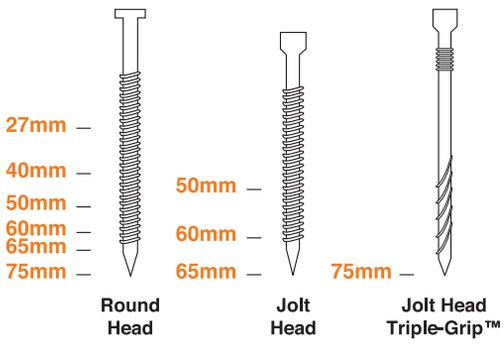

Features & Benefits

- Triple-Grip™ Nail
- Save up to 80% in time and labour
- Covers a wide range of manual applications
- Accepts both wire welded and WirelessCoil nails without adjustment
- Light weight, magnesium body, tough nail magazine cover

Applications

- Most James Hardie Building Products
- Weatherboard
- Tile & Slate underlay
- Ply bracing
- Cavity battens
- Soffit lining
- RAB™ Board
- HardieFlex™
- HomeRAB™

Specifications

Dimensions (mm)	L313 x W132 x H316
Weight	2.88 kg
Operating pressure	70 - 120 psi
Magazine capacity	300 nails
Fastener diameter	2.50 - 3.33mm
Fastener length	27 - 75mm

WB75KIT

Jolt Head, Round Head

Wire Coil

WirelessCoil

Maintenance

Recommended 10 drops daily, disconnect the air hose, apply 10 drops of pneumatic oil into the nailer

9 421023 348923

PRODUCT CODE	DESCRIPTION	PER	CTN QTY
ECKO HAMMAHAND® Weatherboard Nailing Systems			
WB75	HAMMAHAND® WB75 Weatherboard Nailer (25mm-75mm)	Each	Each
P90	ECKO P90 AirPunch®	Each	Each
Xnose	ECKO Xnose® Hole Locator Attachment for Linea®	Each	Each
EK1501	ECKO V8compressor®	Each	Each
H0805S	ECKO Light weight air hose - 15 Metres	Set	Set
WB75KIT	HAMMAHAND® Combo Kit: WB75, V8, Air hose	Combo	Combo
H0805	ECKO Light weight air hose	Metre	Metre
OIL250	ECKO Premium Pneumatic Tool Lubricant 250ml	Each	6
Jolt Head Coil Nails - Galvanised			
JOG-50V8R	HAMMAHAND® Jolt head 50 x 2.8 Galvanised Ring WirelessCoil nails	Carton	3,000
JOG-60V8R	HAMMAHAND® Jolt head 60 x 2.8 Galvanised Ring WirelessCoil nails	Carton	3,000
JOG-65V8R	HAMMAHAND® Jolt head 65 x 2.8 Galvanised Ring WirelessCoil nails	Carton	3,000
JOG-75V8R	HAMMAHAND® Jolt head 75 x 3.15 Galvanised Wire Coil Triple-Grip™ nails	Carton	3,000
Jolt Head Coil Nails - Stainless Steel			
JOSS-50V8R	HAMMAHAND® Jolt head 50 x 2.8 S/Steel Ring WirelessCoil nails	Carton	1,000
JOSS-60V8R	HAMMAHAND® Jolt head 60 x 2.8 S/Steel Ring WirelessCoil nails	Carton	1,000
JOSS-65V8R	HAMMAHAND® Jolt head 65 x 2.8 S/Steel Ring WirelessCoil nails	Carton	1,000
JOSS-75V8R	HAMMAHAND® Jolt head 75 x 3.15 S/Steel Wire Coil Triple-Grip™ nails	Carton	1,000
Round Head Hardened Steel Coil Nails - Galvanised			
HHG-27V5R	HAMMAHAND® Round head 27 x 2.5 Galvanised Ring WirelessCoil nails	Carton	3,000
HHG-40V8R	HAMMAHAND® Round head 40 x 2.8 Galvanised Ring WirelessCoil nails	Carton	3,000
HHG-50V8R	HAMMAHAND® Round head 50 x 2.8 Galvanised Ring WirelessCoil nails	Carton	3,000
HHG-60V8R	HAMMAHAND® Round head 60 x 2.8 Galvanised Ring WirelessCoil nails	Carton	3,000
HHG-65V8R	HAMMAHAND® Round head 65 x 2.8 Galvanised Ring WirelessCoil nails	Carton	3,000
HHG-75V8R	HAMMAHAND® Round head 75 x 3.15 Galvanised Wire Coil Triple-Grip™ nails	Carton	3,000
Round Head Coil Nails - Stainless Steel			
HHSS-40V8R	HAMMAHAND® Round head 40 x 2.8 S/Steel Ring WirelessCoil nails	Carton	1,000
HHSS-50V8R	HAMMAHAND® Round head 50 x 2.8 S/Steel Ring WirelessCoil nails	Carton	1,000
HHSS-60V8R	HAMMAHAND® Round head 60 x 2.8 S/Steel Ring WirelessCoil nails	Carton	1,000
HHSS-65V8R	HAMMAHAND® Round head 65 x 2.8 S/Steel Ring WirelessCoil nails	Carton	1,000
HHSS-75V8R	HAMMAHAND® Round head 75 x 3.15 S/Steel Ring Wire Coil nails	Carton	1,000
NAILSCREW - Fire as a NAIL, Remove as a SCREW			
SKL-8G50	NAILSCREW - 8 gauge x 50mm Zinc	Carton	3,000
SKL-8G60	NAILSCREW - 8 gauge x 60mm Zinc	Carton	3,000
SKL-8G65	NAILSCREW - 8 gauge x 65mm Zinc	Carton	3,000

HAMMAHAND® Airpunch®

Air Punch

Jolt head
50mm - 90mm

Features & Benefits

- Endorsed by James Hardie for Linea® Weatherboard
- Save up to 80% in time and labour
- Consistent punching result
- Light weight, magnesium body

Applications

- Nail Punch
- Timber Recycling

Specifications

Dimensions (mm)	L242 x W56 x H235
Weight	0.8 kg
Operating pressure	50 - 100 psi
Magazine capacity	N/A
Fastener diameter	5.0mm
Fastener length	50 - 90mm

9 421023 348299

Xnose

HAMMAHAND® XNOSE®

Hole locator attachment for weatherboard nailer

Jolt head
50mm - 90mm

Features & Benefits

- Endorsed by James Hardie for Linea® Weatherboard
- Save up to 80% in time and labour
- Accurate hole locator
- User friendly

Specifications

Weight	0.1 kg
Fastener diameter	Up to 5.0mm wide

9 421023 348244

EK1501

HAMMAHAND® V8compressor®

Construction Air Compressor

Features & Benefits

- Light weight, easy carry
- Quick recovery
- Stable inside the vehicle
- Ultra-low voltage start

Specifications

Horse power	1.5HP peak
Weight	18 kg
Pump type	Oil-less
SCFM@90psi	2.30
Pump-up time	35 seconds
Recovery time	10 seconds

Air Hose

Light weight

15 meters

H0805

WB90

HAMMAHAND®

High Wind Zone Weatherboard Nailer

Jolt head, Round head 15˚ angle wire coil and WirelessCoil nails
75mm - 90mm

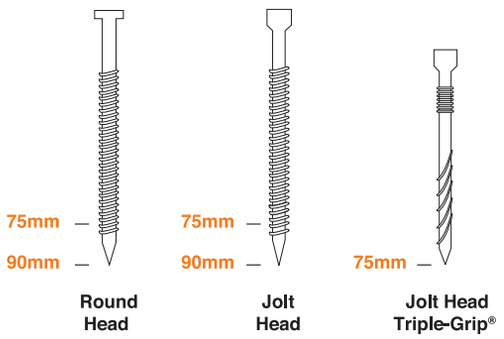

Features & Benefits

- Endorsed by James Hardie for high wind zone cladding
- Save up to 80% in time and labour
- Light weight, magnesium body
- Tough nail magazine cover
- Belt Hook
- Depth adjustment for precision nailing

Applications

- High wind zone cladding
- Cavity battens
- RAB™ Board

Specifications

Dimensions (mm)	L313 x W132 x H316
Weight	2.88 kg
Operating pressure	100 - 120 psi
Magazine capacity	300 nails
Fastener diameter	3.15 - 3.33mm
Fastener length	75 - 90mm

Jolt Head, Round Head

Wire Coil

WirelessCoil

Maintenance

Recommended 10 drops daily, disconnect the air hose, apply 10 drops of pneumatic oil into the nailer

9 421023 348909

PRODUCT CODE	DESCRIPTION	PER	CTN QTY
ECKO HAMMAHAND® High Wind Zone Weatherboard Nailer			
WB90	HAMMAHAND® WB90 Weatherboard Nailer (50mm-90mm)	Each	Each
OIL250	ECKO Premium Pneumatic Tool Lubricant 250ml	Each	6
Jolt Head Coil Nails - Galvanised			
JOG-75V8R	HAMMAHAND® Jolt head 75 x 3.15 Galvanised Wire Coil Triple-Grip™ nails	Carton	3,000
JOG-90V8R	HAMMAHAND® Jolt head 90 x 3.15 Galvanised Ring Wire Coil Triple-Grip™ nail	Carton	3,000
Jolt Head Coil Nails - Stainless Steel			
JOSS-75V8R	HAMMAHAND® Jolt head 75 x 3.15 S/Steel Ring Wire Coil Triple-Grip™ nail	Carton	1,000
JOSS-90V8R	HAMMAHAND® Jolt head 90 x 3.15 S/Steel Ring Wire Coil Triple-Grip™ nail	Carton	1,000
Round Head Hardened Steel Coil Nails - Galvanised			
HHG-75V8R	HAMMAHAND® Round head 75 x 3.15 Galvanised Ring Wire Coil	Carton	3,000
Round Head Coil Nails - Stainless Steel			
HHSS-75V8R	HAMMAHAND® Round head 75 x 3.15 S/Steel Ring Wire Coil Triple-Grip™ nail	Carton	1,000
HHSS-90V8R	HAMMAHAND® Round head 90 x 3.15 S/Steel Ring Wire Coil nail	Carton	1,000

PN38

Joist Hanger Nailer

Joist Hanger Nailer

Round Head 34° angle paper collated
38mm

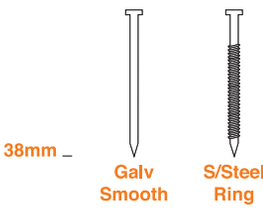

Features & Benefits

- One handed joist nailing
- Easy to locate connector holes
- Powerful - Will nail through the toughest timber surfaces
- User friendly
- Safe nailing process
- No wastage for product nails

Specifications

Dimensions (mm)	L292 x W124 x H237
Weight	1.8 kg

Applications

- Joist hanger and product nail installation
- Sub-floor strip brace to framing
- Strap brace and multibrace installation
- Nail on plate installation

Maintenance

Recommended 10 drops daily, disconnect the air hose, apply 10 drops of pneumatic oil into the nailer

9 421023 340125

MC38

BracketMaster Nailer

Joist Hanger Nailer

Round Head 34° angle paper collated nails
38mm

Specifications

Dimensions (mm)	L292 x W124 x H237
Weight	1.8 kg
Operating pressure	100 - 120 psi
Magazine capacity	24 nails
Fastener diameter	3.33mm
Fastener length	38mm

Joist Hanger Nails

Galvanised

Stainless Steel

9 421023 348893

PRODUCT CODE	DESCRIPTION	PER	CTN QTY
ECKO Joist Hanger Nailing Systems			
PN38	ECKO PN38 Joist Hanger Nailer	Each	4
MC38	HAMMAHAND® MC38 BracketMaster Nailer	Each	4
OIL250	ECKO Premium Pneumatic Tool Lubricant 250ml	Each	6
Joist Hanger Nails - Galvanised			
JHMG-3338	38 x 3.33 Joist Hanger Nails Galvanised Smooth	Box	2,000
Joist Hanger Nails - Stainless Steel			
JHSS-3338	38 x 3.33 Joist Hanger Nails S/Steel Ring	Box	1,000

ND100S

FrameTec100

Construction Air Framer

D Head & Round Head 34° angle paper collated
50mm - 100mm

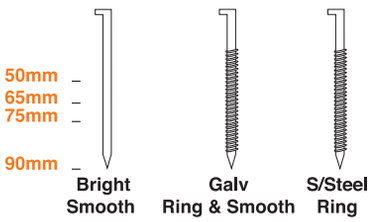

MOST POWERFUL AIR FRAMER IN NEW ZEALAND

Features & Benefits

- Accepts both D head and Round head paper collated 34° framing nails
- Anti-dry firing mechanism
- Easy jam clearing
- Aggressive nose design for skew nailing
- No-Mark pad

Specifications

Driving power	1296.96 inch/lbs @120 psi
Dimensions (mm)	L428 x W138 x H363
Weight	3.44 kg
Operating pressure	100 - 120 psi
Magazine capacity	90 nails
Fastener diameter	2.87 - 3.15mm
Fastener length	50 - 100mm

Applications

- Framing
- J Frame
- Trusses
- Decking
- Subflooring
- Fencing

Maintenance

Recommended 10 drops daily, disconnect the air hose, apply 10 drops of pneumatic oil into the nailer

9 421023 348886

ND90S

FrameTec90™

Construction Air Framer

D Head & Round Head 34° angle paper collated
50mm - 90mm

Specifications

Driving power	1099.32 inch/lbs
Dimensions (mm)	L448 x W151 x H336
Weight	3.56 kg

Gasless Pack

Gasless Pack

D Head Framing Nails

9 421023 348374

PRODUCT CODE	DESCRIPTION	PER	CTN QTY
A34° Air Strip Nailer - Framing			
ND90S	ECKO FrameTec90™ Air Framer	Each	Each
ND100S	ECKO FrameTec100 Air Framer - rear loading	Each	Each
OIL250	ECKO Premium Pneumatic Tool Lubricant 250ml	Each	6
D Head Gasless Pack - Bright			
ND-3465	65 x 2.87 D-head Bright Smooth	Carton	3,000
ND-3475	75 x 3.15 D-head Bright Smooth	Carton	3,000
ND-3488L	90 x 3.15 D-head Bright Smooth Long Strip	Carton	3,000
ND-3490SP	90 x 3.15 D-head Bright Smooth Shear Point	Carton	3,000
ND-3490S	90 x 3.15 D-head Bright Smooth	Carton	3,000
D Head Gasless Pack - Galvanised			
NDHP-3450R	50 x 2.87 D-head Galvanised Ring	Carton	3,000
NDHP-3465R	65 x 2.87 D-head Galvanised Ring	Carton	3,000
NDHP-3475R	75 x 3.15 D-head Galvanised Ring	Carton	3,000
NDHP-3490	90 x 3.15 D-head Galvanised Smooth	Carton	3,000
D Head Gasless Pack - Stainless Steel			
NDSS-3450R	50 x 2.87 D-head S/Steel Ring	Carton	1,000
NDSS-3465R	65 x 2.87 D-head S/Steel Ring	Carton	1,000
NDSS-3475R	75 x 3.05 D-head S/Steel Ring	Carton	1,000
NDSS-3490R	90 x 3.15 D-head S/Steel Ring	Carton	1,000
D Head Gasless Handy Pack - Bright			
ND-3465H	65 x 2.87 D-head Bright Smooth Handy Pack	Carton	1,000
ND-3475H	75 x 3.15 D-head Bright Smooth Handy Pack	Carton	1,000
ND-3490SH	90 x 3.15 D-head Bright Smooth Handy Pack	Carton	1,000
D Head Gasless Handy Pack - Galvanised			
NDHP-3450RH	50 x 2.87 D-head Galvanised Ring Handy Pack	Carton	1,000
NDHP-3465RH	65 x 2.87 D-head Galvanised Ring Handy Pack	Carton	1,000
NDHP-3475RH	75 x 3.15 D-head Galvanised Ring Handy Pack	Carton	1,000
NDHP-3490H	90 x 3.15 D-head Galvanised Smooth Handy Pack	Carton	1,000

AB1550FN

ExteriorMaster®

15 Gauge Air Angle Bradder

FN Series, 15 gauge angle brads
25mm - 50mm

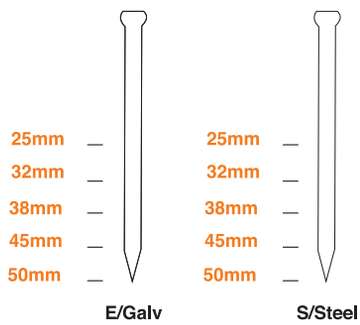

Features & Benefits

- Special hardened driver blade for Scyon® Axon® panel
- Titan® facade panel applications
- Light weight
- Magnesium body for job site durability
- Adjustable depth control
- No-Mark pad

Applications

- Scyon® Axon® Panel
- Titan® Facade Panel
- Exterior and interior trim
- Door and window construction
- Decoration
- Light framing
- Cabinet work
- Interior finishing

Specifications

Dimensions (mm)	L276 x W68 x H261
Weight	1.4 kg
Operating pressure	70 - 120 psi
Magazine capacity	86 nails
Fastener diameter	1.9 x 1.6mm
Fastener length	25 - 50mm

15 Gauge Angle Brads

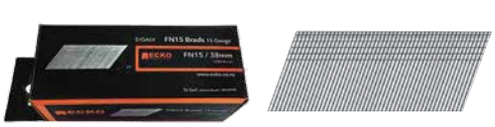

Maintenance

Recommended 10 drops daily, disconnect the air hose, apply 10 drops of pneumatic oil into the nailer

9 421023 348305

PRODUCT CODE	DESCRIPTION	PER	PACK QTY
ECKO ExteriorMaster™ 15 Gauge Air Angle Bradder			
AB1550FN	ECKO ExteriorMaster™ Air Angle Bradder 15ga	Each	Each
OIL250	ECKO Premium Pneumatic Tool Lubricant 250ml	Each	6
15 Gauge Angle Brads - E/Galvanised			
EC-1525	ECKO FN15/25mm E/Galvanised Brads	Pack	1,000
EC-1532	ECKO FN15/32mm E/Galvanised Brads	Pack	1,000
EC-1538	ECKO FN15/38mm E/Galvanised Brads	Pack	1,000
EC-1545	ECKO FN15/45mm E/Galvanised Brads	Pack	1,000
EC-1550	ECKO FN15/50mm E/Galvanised Brads	Pack	1,000
15 Gauge Angle Brads - 304 Stainless Steel			
ECSS-1525	ECKO FN15/25mm S/Steel Brads	Pack	1,000
ECSS-1532	ECKO FN15/32mm S/Steel Brads	Pack	1,000
ECSS-1538	ECKO FN15/38mm S/Steel Brads	Pack	1,000
ECSS-1545	ECKO FN15/45mm S/Steel Brads	Pack	1,000
ECSS-1550	ECKO FN15/50mm S/Steel Brads	Pack	1,000

RD1116P

Wrap-Tacker®

Air Stapler

140/A11 series staples
6mm - 14mm

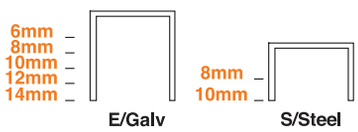

Applications

- Moisture wrap
- House wrap
- Roofing felt
- Foam sheathing insulation
- Labelling

Specifications

Dimensions (mm)	L220 x W140 x H45
Weight	1.4 kg
Operating pressure	70 - 110 psi
Magazine capacity	100 staples
Staple length	6 - 14mm

140 Series Staples

Handy Pack

Trade Pack

Maintenance

Recommended 10 drops daily, disconnect the air hose, apply 10 drops of pneumatic oil into the nailer

9 421023 348350

LT1

H/D Staple Gun Tacker

Staple Gun Tacker

140 series staples
6mm - 14mm

Specifications

Dimensions (mm)	L250 x W30 x H150
Weight	1.8 kg
Staple length	6 - 14mm

9 421023 348213

XPRO

Construction Hammer Tacker

Construction Hammer Tacker

140 series staples
6mm - 14mm

Hammer Tacker Pouch

Specifications

Dimensions (mm)	L310 x W30 x H75
Weight	1.8 kg
Staple length	6 - 14mm

9 421023 349029

PRODUCT CODE	DESCRIPTION	PER	BOX QTY
ECKO WRAP-TACKER® Air Stapler			
RD1116P	ECKO Wrap-Tacker® Air Stapler	Each	10
ECKO Hammer Tacker			
XPRO	ECKO Xpro Hammer Tacker (6mm-14mm)	Each	10
LT1	ECKO LT1 H/D Staple Gun Tacker (6mm-14mm)	Each	10
140 Series Staples Handy Pack - E/Galvanised (Similar to Rapid A11/140)			
RD1106-2M	ECKO 140/6mm E/Galvanised Staples	Box	2,000
RD1108-2M	ECKO 140/8mm E/Galvanised Staples	Box	2,000
RD1110-2M	ECKO 140/10mm E/Galvanised Staples	Box	2,000
RD1112-2M	ECKO 140/12mm E/Galvanised Staples	Box	2,000
RD1114-2M	ECKO 140/14mm E/Galvanised Staples	Box	2,000
RD1114DP-2M	ECKO 140/14mm DP E/Galvanised Staples	Box	2,000
140 Series Staples Trade Pack - E/Galvanised (Similar to Rapid A11/140)			
RD1106-5M	ECKO 140/6mm E/Galvanised Staples	Box	5,000
RD1108-5M	ECKO 140/8mm E/Galvanised Staples	Box	5,000
RD1110-5M	ECKO 140/10mm E/Galvanised Staples	Box	5,000
RD1112-5M	ECKO 140/12mm E/Galvanised Staples	Box	5,000
RD1114-5M	ECKO 140/14mm E/Galvanised Staples	Box	5,000

MT65

MetaltileMaster™

Metal Tile Roofing Nailer

All black coated galv, round head WirelessCoil nails
50mm

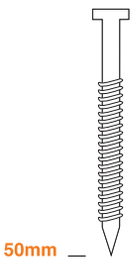

Features & Benefits

- Save up to 80% in time and labour
- Black coated WirelessCoil nails
- Accepts both wire welded and WirelessCoil nails without any adjustment
- Light weight, magnesium body, tough nail magazine cover

Applications

- Metal tile roofing

Specifications

Dimensions (mm)	L304 x W132 x H313
Weight	2.6 kg
Operating pressure	70 - 120 psi
Magazine capacity	250 - 350 nails
Fastener diameter	2.80mm
Fastener length	50mm

All Black Coated Coil Nails

Weatherproof Bucket

WirelessCoil

Maintenance

Recommended 10 drops daily, disconnect the air hose, apply 10 drops of pneumatic oil into the nailer

9 421023 348756

PRODUCT CODE	DESCRIPTION	PER	BUCKET QTY
ECKO MetaltileMaster™ Nailer			
MT65	ECKO MetaltileMaster™ MT65 Nailer	Each	Each
OIL250	ECKO Premium Pneumatic Tool Lubricant 250ml	Each	6
Metal Tile Roof Coil Nails - Black Coated Galvanised (DUOFAST TYPE 0 DEGREE)			
HHMT-50V8R	MetaltileMaster™ 50 x 2.8mm All Black Nails	Bucket	2,400

Interchangeable with Duo-Fast

FBS50

HAMMAHAND®

BattenMaster™ Barb Stapler

3.15 series staple barbed, staple slice cut
33mm - 50mm

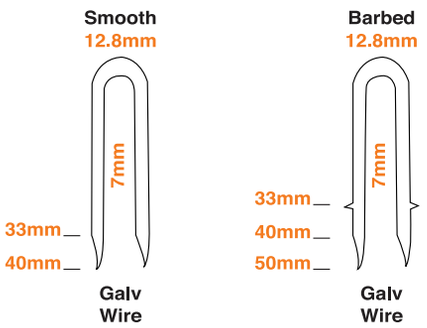

Features & Benefits

- Powerful for high density timber
- Reliability for huge volume fence construction
- Light weight
- Adjustable depth control

Applications

- Rural livestock fencing
- Horticulture
- Rural heavy mesh and heavy woven fencing
- Highway boundary fencing

Specifications

Dimensions (mm)	L33 x W104 x H354
Weight	2.86 kg
Operating pressure	80 - 120 psi
Magazine capacity	52 staples
Staple diameter	3.15mm
Staple length	33 - 50mm

BattenMaster™ Staples

Weatherproof Bucket

Staple Barbed

Staple Slice Cut

Maintenance

Recommended 10 drops daily, disconnect the air hose, apply 10 drops of pneumatic oil into the nailer

9 421023 349005

PRODUCT CODE	DESCRIPTION	PER	BUCKET QTY
ECKO FBS50 BattenMaster™ Barb Stapler			
FBS50	HAMMAHAND® FBS50 Barb Stapler (Barb & Smooth)	Each	Each
OIL250	ECKO Premium Pneumatic Tool Lubricant 250ml	Each	6
BattenMaster™ Staples - 315 Series			
FBS31533	ECKO BattenMaster™ Staples 3.15 x 33mm Galvanised	Bucket	2,700
FBS31540	ECKO BattenMaster™ Staples 3.15 x 40mm Galvanised	Bucket	2,100
BattenMaster™ Staples Barbed - 315 Series			
FBS31533BARB	ECKO BattenMaster™ Barbed Staples 3.15 x 33mm Galvanised	Bucket	2,100
FBS31540BARB	ECKO BattenMaster™ Barbed Staples 3.15 x 40mm Galvanised	Bucket	1,800
FBS31550BARB	ECKO BattenMaster™ Barbed Staples 3.15 x 50mm Galvanised	Bucket	1,400
BattenMaster™ Staples Barbed - 400 Series			
FBS40050BARB	ECKO BattenMaster™ Barbed Staples 4.00 x 50mm Galvanised	Bucket	1,000

PA45

Shingle Roof Coil Nailer

Shingle Roof Coil Nailer

Large head 15° angle wire coil collated
25mm - 45mm

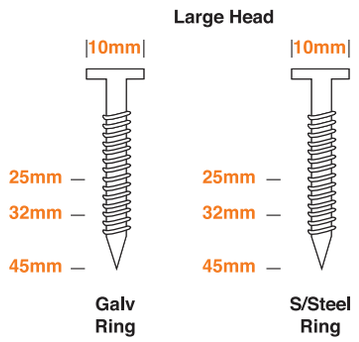

Features & Benefits

- Light weight, magnesium body
- Tough nail magazine cover

Applications

- HomeRAB®
- RAB board
- Shingle roofing
- Tile and slate underlay
- Asphalt shingle

Specifications

Dimensions (mm)	L294 x W216 x H276
Weight	2.52 kg
Operating pressure	100 - 120 psi
Magazine capacity	120 nails
Fastener diameter	3.05mm
Fastener length	25 - 45mm

Large Head Coil Nails

Maintenance

Recommended 10 drops daily, disconnect the air hose, apply 10 drops of pneumatic oil into the nailer

9 421023 348916

PRODUCT CODE	DESCRIPTION	PER	CTN QTY
Shingle Roof Coil Nails - 16° Wire Collated			
ECKO RABboard/Shingle Roof Coil Nailer			
PA45	HAMMAHAND® PA45 Shingle Roof Coil Nailer	Each	Each
OIL250	ECKO Premium Pneumatic Tool Lubricant 250ml	Each	6
Large Head Shingle Roof Coil Nails - Galvanised			
RN-30525R	10mm Head - 25 x 3.05 Galvanised Shingle Roof Coil Nails	Carton	7,200
RN-30532R	10mm Head - 32 x 3.05 Galvanised Shingle Roof Coil Nails	Carton	7,200
RN-30545R	10mm Head - 45 x 3.05 Galvanised Shingle Roof Coil Nails	Carton	7,200
Large Head Shingle Roof Coil Nails - Stainless Steel			
RNSS-30525R	10mm Head - 25 x 3.05 S/Steel Shingle Roof Coil Nails	Carton	7,200
RNSS-30532R	10mm Head - 32 x 3.05 S/Steel Shingle Roof Coil Nails	Carton	7,200
RNSS-30545R	10mm Head - 45 x 3.05 S/Steel Shingle Roof Coil Nails	Carton	7,200

PNC1

Palm Nailer

Palm Nailer

Loose nails
32mm - 178mm

Features & Benefits

- Perfect for timber framing in construction site
- Ideal for driving loose nails in confined areas and for nailing of metal connectors and joist hangars
- Easier and simpler to use

Applications

- Retaining wall
- Auto hammer

Specifications

Dimensions (mm)	L132 x W82 x H124
Weight	1.18 kg
Operating pressure	100 - 120 psi
Magazine capacity	1 nail
Fastener diameter	2.87 - 4.1mm (standard nose)
	4.88 - 7.94mm (large nose) - optional
Fastener length	32 - 178mm

Carry Case

Maintenance

Recommended 10 drops daily, disconnect the air hose, apply 10 drops of pneumatic oil into the nailer

PRODUCT CODE	DESCRIPTION	PER	CTN QTY
ECKO Palm Nailer			
PNC1	ECKO Palm Nailer	Each	4
OIL250	ECKO Premium Pneumatic Tool Lubricant 250ml	Each	6

9 421023 348916

CannonMaster™
Strip Nailer

Strip nails
100mm - 150mm

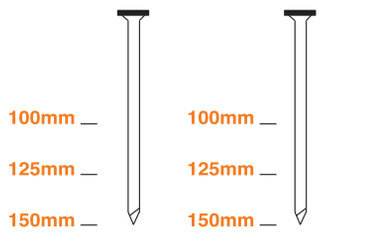

Galv Smooth | 316 S/STEEL Smooth

Applications

- Retaining wall
- Boardwalk
- Landscaping

Features & Benefits

- Magnesium body
- Tough nail magazine cover

Specifications

Dimensions (mm)	L568 x W145 x H538
Weight	6.95 kg
Operating pressure	100 - 120 psi
Magazine capacity	60 nails
Fastener diameter	3.80 - 4.60mm
Fastener length	100 - 160mm

Strip Nails

Weatherproof Bucket

Maintenance

Recommended 10 drops daily, disconnect the air hose, apply 10 drops of pneumatic oil into the nailer

PRODUCT CODE	DESCRIPTION	PER	BUCKET QTY
ECKO CannonMaster™ Strip Nailer			
NR160	ECKO CannonMaster™ NR160 Nailer	Each	Each
NR160KIT	ECKO CannonMaster™ NR160 Nailer & Compressor & 100M air hose	Each	Each
NR160KIT-HIRE	ECKO CannonMaster™ NR160KIT Weekly Hire	Week	Set
OIL250	ECKO Premium Pneumatic Tool Lubricant 250ml	Each	6
CannonMaster™ Strip Nails - Galvanised			
NRHP-22100	ECKO CannonMaster™ 100mm Galvanised	Bucket	1100
NRHP-22125	ECKO CannonMaster™ 125mm Galvanised	Bucket	800
NRHP-22150	ECKO CannonMaster™ 150mm Galvanised	Bucket	500
CannonMaster™ Strip Nails - 316 Stainless Steel			
NRSS316-22100	ECKO CannonMaster™ 100mm 316 S/Steel	Bucket	550
NRSS316-22125	ECKO CannonMaster™ 125mm 316 S/Steel	Bucket	400
NRSS316-22150	ECKO CannonMaster™ 150mm 316 S/Steel	Bucket	250

9 421023 348916

DA64

15 Gauge Air Bradder

DA series, 15 gauge angle finish brads
25mm - 64mm

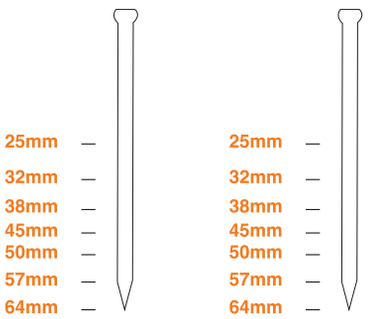

Features & Benefits

- Quick jam up release design
- Depth control adjustment
- Bump-Fire and sequential fire trigger
- High capacity rear loading magazine
- Rubber grip provides comfortable feel

Applications

- Decoration
- Light frame
- Door
- Window
- Boards in furniture
- Hardwood flooring
- Paneling trim panels

Specifications

Dimensions (mm)	L326 x W68 x H261
Weight	1.4 kg
Operating pressure	70 - 110 psi
Magazine capacity	86 nails
Fastener diameter	1.9 x 1.6mm
Fastener length	25 - 65mm

Maintenance

Recommended 10 drops daily, disconnect the air hose, apply 10 drops of pneumatic oil into the nailer

9 421023 348503

PRODUCT CODE	DESCRIPTION	PER	BOX QTY
ECKO DA Bradders			
DA64	ECKO DA64 Air Bradder 15 gauge	Each	Each
OIL250	ECKO Premium Pneumatic Tool Lubricant 250ml	Each	6
DA Series 15 Gauge Brads (Mylar Taped) (Similar to Senco DA) - E/Galvanised			
BDG-1325	DA13 25mm Brads E/Galvanised	Box	3,000
BDG-1532	DA15 32mm Brads E/Galvanised	Box	3,000
BDG-1738	DA17 38mm Brads E/Galvanised	Box	3,000
BDG-1945	DA19 45mm Brads E/Galvanised	Box	3,000
BDG-2150	DA21 50mm Brads E/Galvanised	Box	3,000
BDG-2564	DA25 64mm Brads E/Galvanised	Box	3,000
DA Series 15 Gauge Brads - S/Steel			
BDSS-1325	DA13 25mm Brads S/Steel	Box	1,000
BDSS-1532	DA15 32mm Brads S/Steel	Box	1,000
BDSS-1738	DA17 38mm Brads S/Steel	Box	1,000
BDSS-1945	DA19 45mm Brads S/Steel	Box	1,000
BDSS-2150	DA21 50mm Brads S/Steel	Box	1,000
BDSS-2564	DA25 64mm Brads S/Steel	Box	1,000